PART No. 1418THHP

for more information visit

www.hammondmfg.com

Data subject to change without notice

Isometric drawing Not to Scale

TOP VIEW

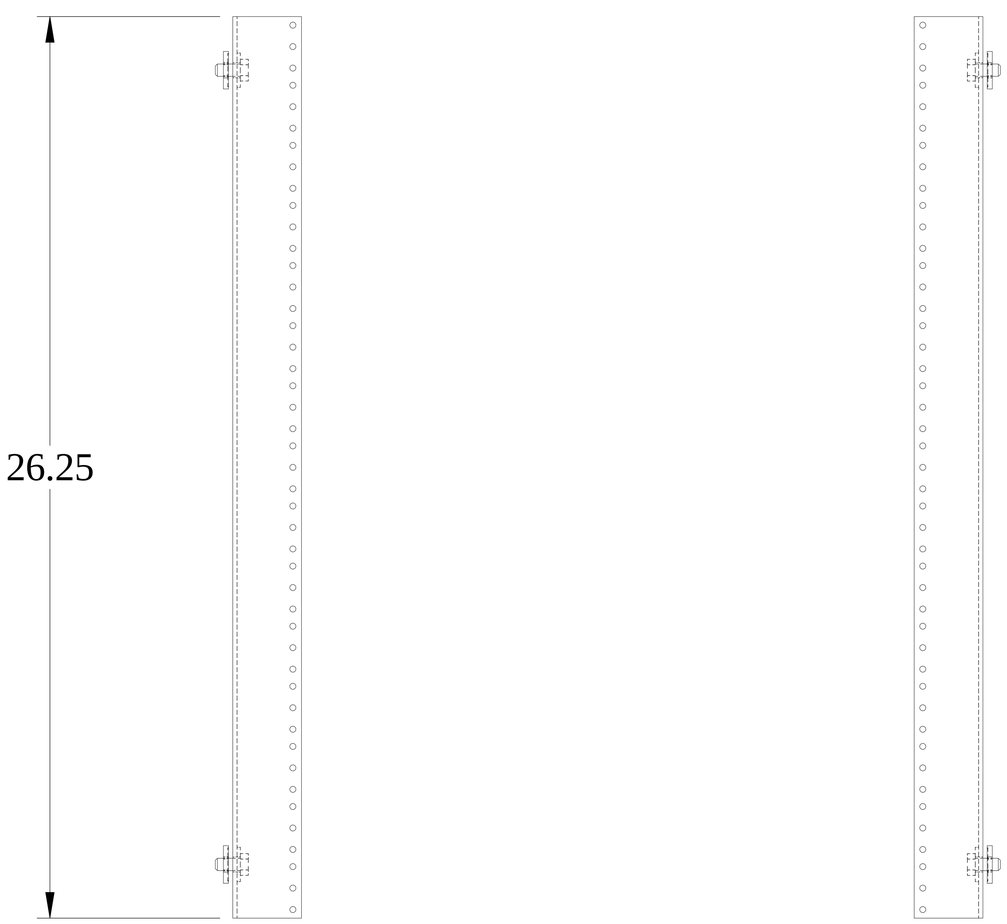

FRONT VIEW

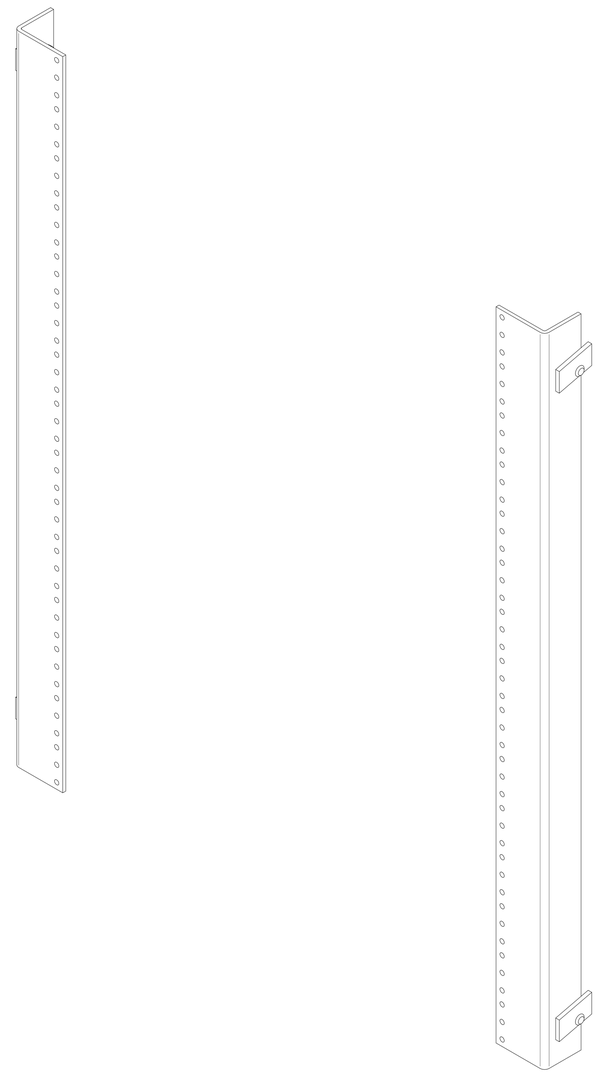

ISOMETRIC VIEW